PRODUCT DATASHEET

Aluminium profile slot 8 | 30x30 - BSB

Article number: BT-010101.08.00.000

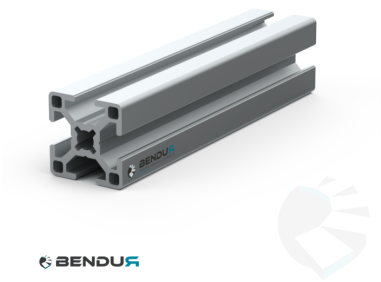

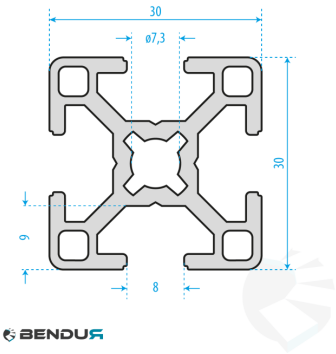

View this product online: https://www.bendur.com/uk/aluminium-profile-slot-8-30x30-bsb-bt0101010800000.html

Product details

Profile system	BSB
Slot type	8
Material	Aluminium
Standard length [mm]	6060
Width [mm]	30
Height [mm]	30
Finish	Geanodiseerd
Color	Naturel
HS-code	7604.29.90.90
Core Count	1
Thread diameter [mm]	M8

Specifications

Alloy	EN AW 6063 - T6
Weight per meter	0.9 kg/m

Description

The BSB aluminium construction profile **30×30 mm, slot 8** is a versatile profile with 4 open 8 mm T-slots. The open slots let you make connections in no time – from machine frames to transport carts – without machining the profile itself. The core holes take an M8 internal thread, ideal for mounting levelling feet and connecting plates or for joining two profiles.

The profile is extruded from **EN AW-6063 T6** aluminium to DIN EN 573 and **anodised natural** as standard (E6 C0, layer thickness 10–15 µm). We manufacture to DIN EN 12020-2. The anodising gives a corrosion-resistant finish and a clean look that holds up in industrial environments. The BSB profile system is fully **Bosch Rexroth compatible** – every corner connector, T-slot nut and hammer-head bolt from the 30 series fits straight away.

At Bendur we cut all your profiles to size in **our own saw shop in Someren**. Profiles are cut burr-free as standard, so they are pleasant to handle and assemble. For a small surcharge we also take care of **tapping, drilling and milling** – add the specs to your order or ask for a quote for custom work.

Compatible with the Bosch Rexroth system: same size and slot as Bosch Rexroth 30x30 (ref. 3 842 990 720).

Applications

- Material trolley
- Light frames
- Partition wall
- Hood or guard
- Workstation build

Matching parts: corner connectors, cube connectors, T-slot nuts slot 8, hammer-head nuts, end caps, slot cover profiles

Product benefits

- ✓ Slot 8 mm – Bosch Rexroth compatible
- ✓ Core hole for an M8 internal thread
- ✓ Burr-free cut
- ✓ Alloy EN AW-6063 T6 to DIN EN 573
- ✓ Anodised E6 C0 (natural, 10–15 µm), corrosion-resistant
- ✓ Manufactured to DIN EN 12020-2
- ✓ Cut to size (20–6000 mm)

Bendur B.V.

Vaarselstraat 10a | 5711RE Someren | The Netherlands

Tel. +31 (0)40 340 01 86 | www.bendur.com

This document was automatically generated on 27-11-2026. Subject to change.