BENDUR INDUSTRIAL HARDWARE & COMPONENTS WEBSTORE

PRODUCT DATASHEET

Central quick connector screw BSB - slot 10

Article number: BT-020913.01.10.020

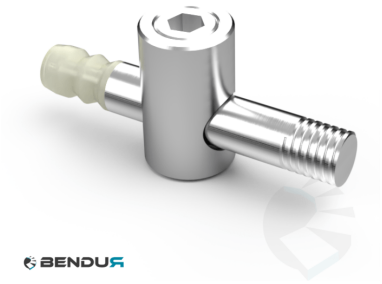

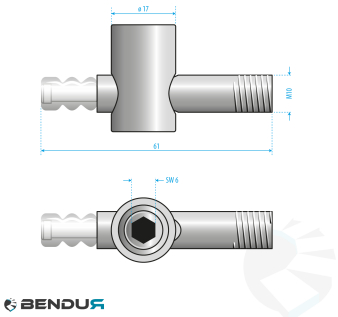

View this product online: https://www.bendur.com/uk/central-quick-connector-screw-bsb-slot-10-bt0209130110020.html

Product details

Profile system	BSB
Slot type	10
Material	Staal
Thread diameter [mm]	M10
Finish	Elektrolytisch verzinkt
HS-code	7326.90.98.90

Description

With this quick connector you fix an aluminium profile to a panel element with an M10 threaded hole. The connector comes pre-assembled.

To mount it, you drill a through hole of Ø17 x 35 mm in the centre of the profile, 22.5 mm from the end.

- Material: steel, zinc plated
- Connection thread: M10
- For BSB profiles with slot 10
- Machining: through hole Ø17 x 35 mm, 22.5 mm from the profile end
- Supplied pre-assembled

Bendur B.V.

Vaarselstraat 10a | 5711RE Someren | The Netherlands

Tel. +31 (0)40 340 01 86 | www.bendur.com

This document was automatically generated on 16-11-2026. Subject to change.