BENDUR INDUSTRIAL HARDWARE & COMPONENTS WEBSTORE

PRODUCT DATASHEET

Self forming screw BSB | S6x16 T25

Article number: BT-020915.01.02.T25



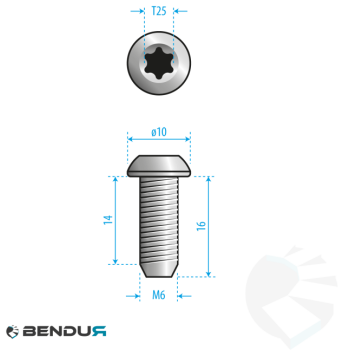

View this product online: https://www.bendur.com/uk/self-forming-screw-bsb-s6x16-t25-bt0209150102t25.html

Product details

Profile system	BSB
Material	Steel
Thread diameter [mm]	M8
Finish	Zinc plated
HS-code	7318.14.99.90

Description

With this self-forming screw S6 x 16 you connect two BSB profiles. The screw forms its own thread in the core bore, so you don't need to tap a thread first.

Thanks to the shape of the head and the self-forming thread, the screw makes an electrically conductive (ESD) connection between the two profiles.

- Material: steel, zinc plated
- Size: S6 x 16 mm, head Ø10 mm
- Drive: Torx T25
- Conductive (ESD) connection
- For BSB profiles

Bendur B.V.

Vaarselstraat 10a | 5711RE Someren | The Netherlands

Tel. +31 (0)40 340 01 86 | www.bendur.com

This document was automatically generated on 20-11-2026. Subject to change.