BENDUR INDUSTRIAL HARDWARE & COMPONENTS WEBSTORE

PRODUCT DATASHEET

Cross cable binding block BSB - slot 8

Article number: BT-021603.01.08.000

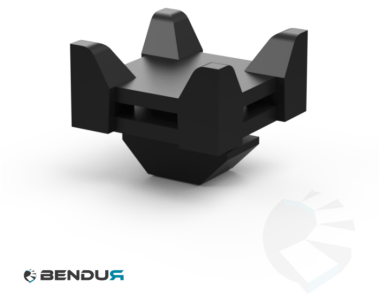

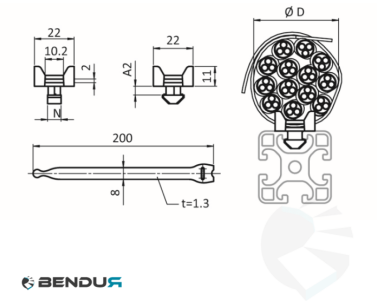

View this product online: https://www.bendur.com/uk/cross-cable-binding-block-bsb-slot-8-bt0216030108000.html

Product details

Profile system	BSB
Slot type	8
Material	Glasvezelversterkt kunststof [PA]
HS-code	3926.90.97.90

Description

This cross cable binding block fixes cables and hoses to a BSB profile with slot 8, in two directions: with cable ties along the profile or across it.

You push the block into the slot and turn it a quarter turn. The hammer head then clamps behind the edges of the slot. No slot nut or screw is needed, and you can still fit the block when the frame is already assembled.

- Material: glass fibre reinforced plastic (PA), black
- Size: about 22 x 22 mm
- Fits BSB profiles slot 8 with a slot edge of 2.2 mm

Bendur B.V.

Vaarselstraat 10a | 5711RE Someren | The Netherlands

Tel. +31 (0)40 340 01 86 | www.bendur.com

This document was automatically generated on 24-11-2026. Subject to change.