BENDUR INDUSTRIAL HARDWARE & COMPONENTS WEBSTORE

# PRODUCT DATASHEET

## Cross cable binding block BSB - slot 10

Article number: BT-021603.01.10.000

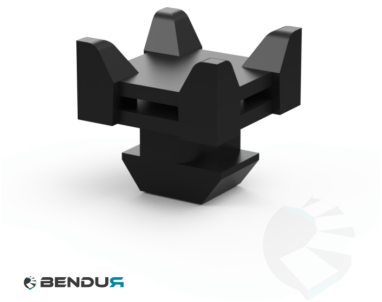


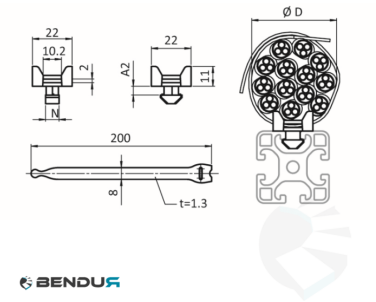


View this product online: https://www.bendur.com/uk/cross-cable-binding-block-bsb-slot-10-bt0216030110000.html

### Product details

| | |
|---|---|
| **Profile system** | BSB |
| **Slot type** | 10 |
| **Material** | Glasvezelversterkt kunststof [PA] |
| **HS-code** | 3926.90.97.90 |

### Description

This cross cable binding block fixes cables and hoses to a BSB profile with slot 10, in two directions: with cable ties along the profile or across it.

You push the block into the slot and turn it a quarter turn. The hammer head then clamps behind the edges of the slot. No slot nut or screw is needed, and you can still fit the block when the frame is already assembled.

- Material: glass fibre reinforced plastic (PA), black
- Size: about 22 x 22 mm
- Fits BSB profiles slot 10 with a slot edge of 6 mm

**Bendur B.V.**

Vaarselstraat 10a | 5711RE Someren | The Netherlands

Tel. +31 (0)40 340 01 86 | www.bendur.com

*This document was automatically generated on 20-11-2026. Subject to change.*