PRODUCT DATASHEET

ConveyorBricks Side guide clamp + assembly set | Type 1

Article number: BT-060501.05.01.100



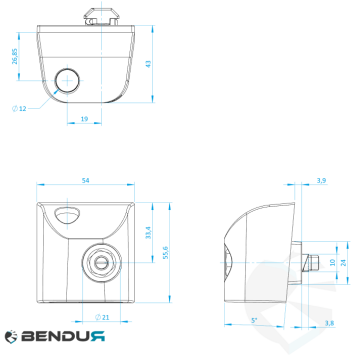

View this product online: https://www.bendur.com/uk/conveyorbricks-side-guide-clamp-assembly-set-type-1-bt0605010501100.html

Product details

Compatible system	ConveyorBricks
Material	Glasvezelversterkt kunststof [PA]
Thread diameter [mm]	M8
Color	Zwart
HS-code	3926 90 97

Description

This side guide clamp is designed to be mounted on our side guide profile and to clamp components with a diameter of Ø12, such as rods, sensor housings, and reflector

Bendur B.V.

Vaarselstraat 10a | 5711RE Someren | The Netherlands

Tel. +31 (0)40 340 01 86 | www.bendur.com

This document was automatically generated on 26-11-2026. Subject to change.