PRODUCT DATASHEET

ConveyorBricks Adjustable side guide connector + assembly set

Article number: BT-060501.06.03.100



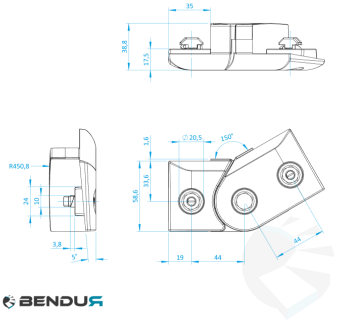

View this product online: https://www.bendur.com/uk/conveyorbricks-adjustable-side-guide-connector-assembly-set-bt0605010603100.html

Product details

Compatible system	ConveyorBricks
Material	Glasvezelversterkt kunststof [PA]
Thread diameter [mm]	M8
Color	Zwart
HS-code	3926 90 97

Description

This element connects two side guiding profiles and can be rotated up to 30°, allowing for smooth transitions between straight, inclined, or declined guiding paths.

Bendur B.V.

Vaarselstraat 10a | 5711RE Someren | The Netherlands

Tel. +31 (0)40 340 01 86 | www.bendur.com

This document was automatically generated on 25-11-2026. Subject to change.