BENDUR
INDUSTRIAL HARDWARE & COMPONENTS
WEBSTORE

PRODUCT DATASHEET

ConveyorBricks Side guide shoe + assembly & clamp set Ø12 | Type 1

Article number: BT-060501.10.01.200



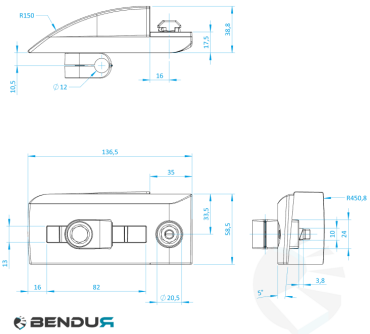

View this product online: https://www.bendur.com/uk/conveyorbricks-side-guide-shoe-assembly-clamp-set-o12-type-1-bt0605011001200.html

Product details

Compatible system	ConveyorBricks
Material	Glasvezelversterkt kunststof [PA]
Thread diameter [mm]	M8
Color	Zwart
HS-code	3926 90 97

Description

This component is designed to seamlessly guide cartons, packages, and totes into the transport direction of the conveyor system. It ensures smooth and reliable transitions, minimizing friction and wear while maintaining the integrity of the conveyed items. The additional clamp facilitates easy installation and secure attachment for rods with a diameter of Ø12.

Bendur B.V.

Vaarselstraat 10a | 5711RE Someren | The Netherlands

Tel. +31 (0)40 340 01 86 | www.bendur.com

This document was automatically generated on 25-11-2026. Subject to change.