PRODUCT DATASHEET

ConveyorBricks Connection strip for curve

Article number: BT-060501.21.10.004



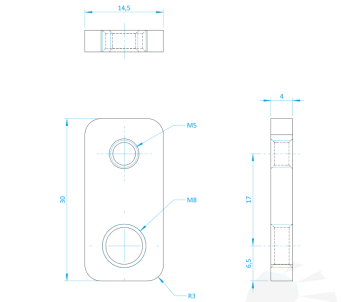

View this product online: https://www.bendur.com/uk/conveyorbricks-connection-strip-for-curve-bt0605012110004.html

Product details

Compatible system	ConveyorBricks
Material	Staal
Thread diameter [mm]	M5 & M8
Finish	Elektrolytisch verzinkt
HS-code	7326 90 98

Description

The ConveyorBricks Connection strip for curve seamlessly connects the latest curve segment to the next module constructed with our aluminum roller conveyor side profile. Its user-friendly design ensures an easy installation process without errors, mismatches, or misalignments, guaranteeing a smooth and robust connection for optimal conveyor performance.

Bendur B.V.

Vaarselstraat 10a | 5711RE Someren | The Netherlands

Tel. +31 (0)40 340 01 86 | www.bendur.com

This document was automatically generated on 17-11-2026. Subject to change.