PRODUCT DATASHEET

ConveyorBricks Roller curve outside segment 15° | P75 - 620

Article number: BT-061201.01.02.620

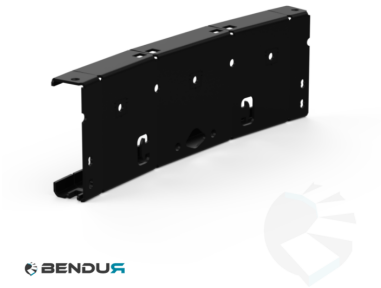

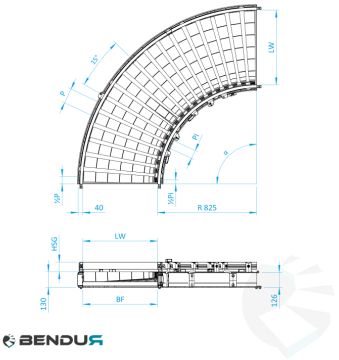

View this product online: https://www.bendur.com/uk/conveyorbricks-roller-curve-outside-segment-15-p75-620-bt0612010102620.html

Product details

Compatible system	ConveyorBricks
Material	Staal
Finish	Gepoedercoat
Color	Zwart
HS-code	7326 90 98

Description

The innovative 15° segments from the ConveyorBricks series are specifically designed to create smooth and precise curves in roller conveyor systems. By assembling multiple segments in sequence, you can effortlessly configure curves of 30°, 45°, 60°, 75°, or 90°, perfectly tailored to meet the specific needs of your project. This outside curve segment is engineered for a rated width (BF) of 620 mm and a roller pitch of 75 mm (P75). When paired with tapered rollers from your preferred supplier, it allows you to construct high-quality and reliable curves with ease.

Bendur B.V.

Vaarselstraat 10a | 5711RE Someren | The Netherlands

Tel. +31 (0)40 340 01 86 | www.bendur.com

This document was automatically generated on 14-11-2026. Subject to change.