PRODUCT DATASHEET

Hexagon socket countersunk head screw zps | M8x16 - DIN 7991

Article number: BT-070208.01.05.016

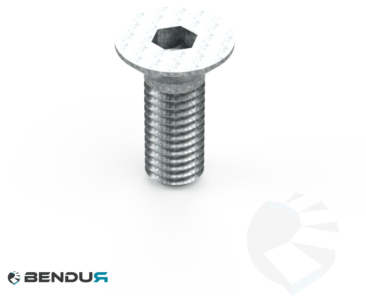

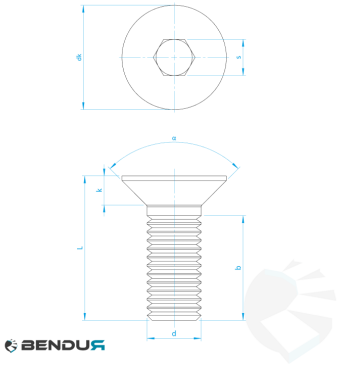

View this product online: https://www.bendur.com/uk/hexagon-socket-countersunk-head-screw-zps-m8x16-din-7991-bt0702080105016.html

Product details

Standards	ISO 10642, DIN ≈ 7991
HS-code	7318.15.68.90

Specifications

Thread	M8
Surface treatment	Zinc plated

Description

Countersunk socket screw for flush mounting and a clean surface finish.

Bendur B.V.

Vaarselstraat 10a | 5711RE Someren | The Netherlands

Tel. +31 (0)40 340 01 86 | www.bendur.com

This document was automatically generated on 20-11-2026. Subject to change.