BENDUR
INDUSTRIAL HARDWARE & COMPONENTS
WEBSTORE

PRODUCT DATASHEET

Stainless steel side guide clamp for guide h=78 | ss rod | M10x23 straight application

Article number: CP-060502.47.00.001



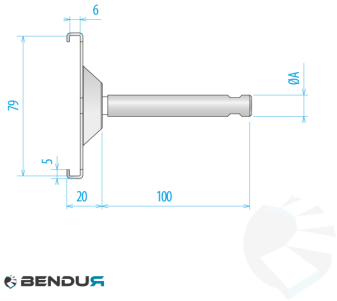

View this product online: https://www.bendur.com/uk/stainless-steel-side-guide-clamp-for-guide-h-78-ss-rod-m10x23-straight-application-cp0605024700001.html

Product details

Product series	SIDE GUIDE CLAMP SINGLE
Material	RVS
With pin	Ja

Description

This stainless steel side guide clamp, with a height of 78 mm, is designed for straight applications and comes with a stainless steel rod with M10x23 internal thread. It offers a durable and reliable solution for guiding materials, ideal for various applications where precision and robustness are required.

Bendur B.V.

Vaarselstraat 10a | 5711RE Someren | The Netherlands

Tel. +31 (0)40 340 01 86 | www.bendur.com

This document was automatically generated on 23-11-2026. Subject to change.