PRODUCT DATASHEET

Leveling foot with overmolded baseplate & fully threaded ss spindle - Ø150 + ar

Article number: CP-060702.10.00.801



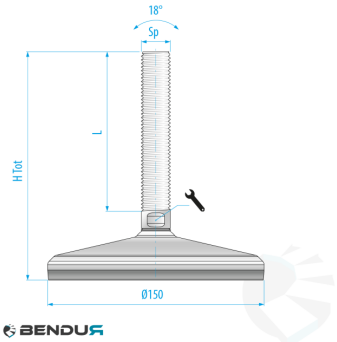

View this product online: https://www.bendur.com/uk/leveling-foot-with-overmolded-baseplate-fully-threaded-ss-spindle-o150-ar-cp0607021000801.html

Product details

Product series	S400
Footplate diameter [mm]	150

Description

This stainless steel leveling foot with anti-slip rubber features a base with a diameter of 150mm and a spindle with full M20, M24, M30, or M36 thread. The total height of this leveling foot is 100 to 350mm with a maximum load capacity of 45,000N. Extremely suitable for industrial environments where a high level of hygiene is required.

Bendur B.V.

Vaarselstraat 10a | 5711RE Someren | The Netherlands

Tel. +31 (0)40 340 01 86 | www.bendur.com

This document was automatically generated on 16-11-2026. Subject to change.