PRODUCT DATASHEET

Leveling foot with machined baseplate & fully threaded ss spindle - Ø125 + ar

Article number: CP-060702.14.00.301



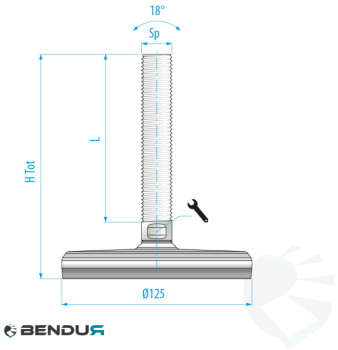

View this product online: https://www.bendur.com/uk/leveling-foot-with-machined-baseplate-fully-threaded-ss-spindle-o125-ar-cp0607021400301.html

Product details

Product series	S400 HEAVY
Footplate diameter [mm]	125

Description

This stainless steel leveling foot with anti-slip rubber features a fully machined base with a diameter of 125 mm and a spindle with full M20, M24, M30, or M36 thread. The total height of this leveling foot is 88.5 to 338.5 mm with a maximum load capacity of 45,000, 70,000, 100,000, or 130,000 N. It is ideally suited for industrial environments where a high level of hygiene and heavy loads are required. The stainless steel base and its distinctive shape guarantee high load resistance and excellent cleanability, even in critical conditions. The stainless steel washer ensures a complete seal between the spindle and the base plate.

Bendur B.V.

Vaarselstraat 10a | 5711RE Someren | The Netherlands

Tel. +31 (0)40 340 01 86 | www.bendur.com

This document was automatically generated on 16-11-2026. Subject to change.