BENDUR
INDUSTRIAL HARDWARE & COMPONENTS
WEBSTORE

PRODUCT DATASHEET

Leveling foot with machined baseplate & fully threaded ss spindle - Ø105 + ar

Article number: CP-060702.18.00.201



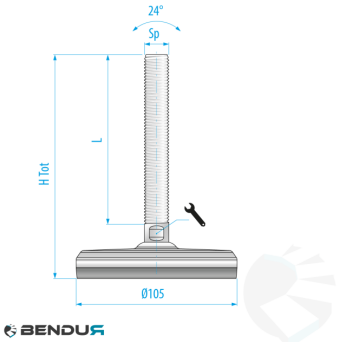

View this product online: https://www.bendur.com/uk/leveling-foot-with-machined-baseplate-fully-threaded-ss-spindle-o105-ar-cp0607021800201.html

Product details

Product series	S400 HEAVY-SPLIT
Footplate diameter [mm]	105

Description

This stainless steel leveling foot with anti-slip rubber features a fully machined base with a diameter of 105 mm and a separated spindle with full M16, M20, M24, M30, or M36 thread. The total height of this leveling foot is 87.5 to 337.5 mm with a maximum load capacity of 30,000, 45,000, 70,000, 100,000, or 120,000 N. Extremely suitable for industrial environments where a high level of hygiene and heavy loads are required. The stainless steel base and its distinctive shape guarantee high load resistance and excellent cleanability, even in critical conditions.

Bendur B.V.

Vaarselstraat 10a | 5711RE Someren | The Netherlands

Tel. +31 (0)40 340 01 86 | www.bendur.com

This document was automatically generated on 22-11-2026. Subject to change.