BENDUR
INDUSTRIAL HARDWARE & COMPONENTS
WEBSTORE

PRODUCT DATASHEET

Leveling foot hygienic with overmolded baseplate - Ø180 + ar

Article number: CP-060702.20.00.901



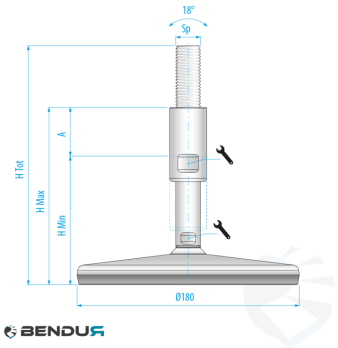

View this product online: https://www.bendur.com/uk/leveling-foot-hygienic-with-overmolded-baseplate-o180-ar-cp0607022000901.html

Product details

Product series	S400B
Footplate diameter [mm]	180

Description

This stainless steel leveling foot with anti-slip rubber features a cast base with a diameter of 180 mm and an enclosed spindle M12, M16, M20, M24, M30, or M36. The total height of this leveling foot is 191 to 301 mm with a maximum load capacity of 12,000, 30,000, or 38,000 N. It is ideally suited for industrial environments where a high level of hygiene and heavy loads are required, such as in the food, chemical, and pharmaceutical sectors. The stainless steel base and its distinctive shape guarantee high load resistance and excellent cleanability, even in critical conditions. The protected spindle prevents the threaded section from being exposed to external substances.

Bendur B.V.

Vaarselstraat 10a | 5711RE Someren | The Netherlands

Tel. +31 (0)40 340 01 86 | www.bendur.com

This document was automatically generated on 16-11-2026. Subject to change.