BENDUR
INDUSTRIAL HARDWARE & COMPONENTS
WEBSTORE

PRODUCT DATASHEET

Leveling foot hygienic with machined baseplate - Ø150 + ar

Article number: CP-060702.28.00.401



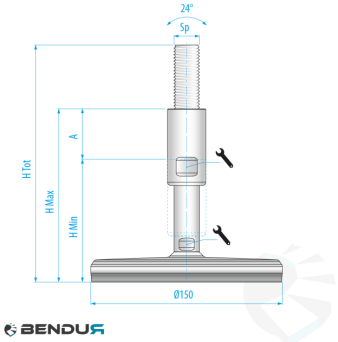

View this product online: https://www.bendur.com/uk/leveling-foot-hygienic-with-machined-baseplate-o150-ar-cp0607022800401.html

Product details

Product series	S400B HEAVY-SPLIT
Footplate diameter [mm]	150

Description

This stainless steel leveling foot with anti-slip rubber features a fully machined base with a diameter of 150 mm and an enclosed and separated spindle M12, M16, M20, M24, M30, or M36. The total height of this leveling foot is 183.5 to 293.5 mm with a maximum load capacity of 12,000, 30,000, 45,000, 70,000, 100,000, or 150,000 N. It is ideally suited for industrial environments where a high level of hygiene and heavy loads are required, such as in the food, chemical, and pharmaceutical sectors. The stainless steel base and its distinctive shape guarantee high load resistance and excellent cleanability, even in critical conditions. The protected spindle prevents the threaded section from being exposed to external substances.

Bendur B.V.

Vaarselstraat 10a | 5711RE Someren | The Netherlands

Tel. +31 (0)40 340 01 86 | www.bendur.com

This document was automatically generated on 13-11-2026. Subject to change.