BENDUR
INDUSTRIAL HARDWARE & COMPONENTS
WEBSTORE

PRODUCT DATASHEET

Leveling foot hygienic certified with overmolded sd baseplate - Ø60 + ar

Article number: CP-060702.30.00.001



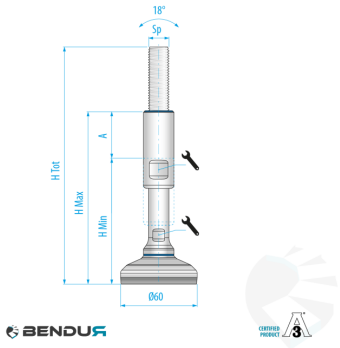

View this product online: https://www.bendur.com/uk/leveling-foot-hygienic-certified-with-overmolded-sd-baseplate-o60-ar-cp0607023000001.html

Product details

Product series	C500
Footplate diameter [mm]	60

Description

This stainless steel leveling foot with vulcanized anti-slip rubber features a cast base with a diameter of 60mm and a sealed spindle with hermetic seals M12, M16, M20, M24, M30, or M36. The total height of this leveling foot is 185 to 295mm with a maximum load capacity of 4,500N. The best choice for industrial environments with a critical hygiene level, such as in the dairy, food, chemical, and pharmaceutical sectors. The stainless steel base and its special shape guarantee excellent cleanability, especially in critical conditions. The protected spindle offers 100% thread protection and prevents exposure to external agents.

Bendur B.V.

Vaarselstraat 10a | 5711RE Someren | The Netherlands

Tel. +31 (0)40 340 01 86 | www.bendur.com

This document was automatically generated on 20-11-2026. Subject to change.