PRODUCT DATASHEET

Leveling foot hygienic certified with overmolded sd baseplate - Ø150 + ar

Article number: CP-060702.30.00.401



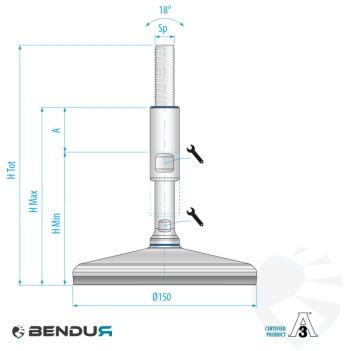

View this product online: https://www.bendur.com/uk/leveling-foot-hygienic-certified-with-overmolded-sd-baseplate-o150-ar-cp0607023000401.html

Product details

Product series	C500
Footplate diameter [mm]	150

Description

This stainless steel leveling foot with vulcanized anti-slip rubber features a cast base with a diameter of 150 mm and an enclosed spindle with hermetic seals M12, M16, M20, M24, M30, or M36. The total height of this leveling foot is 195 to 305 mm with a maximum load capacity of 12,000, 30,000, or 45,000 N. The best choice for industrial environments with a critical hygiene level, such as in the dairy, food, chemical, and pharmaceutical sectors. The stainless steel base and its special shape guarantee excellent cleanability, especially in critical conditions. The protected spindle offers 100% thread protection and prevents exposure to external agents.

Bendur B.V.

Vaarselstraat 10a | 5711RE Someren | The Netherlands

Tel. +31 (0)40 340 01 86 | www.bendur.com

This document was automatically generated on 25-11-2026. Subject to change.