BENDUR
INDUSTRIAL HARDWARE & COMPONENTS
WEBSTORE

PRODUCT DATASHEET

Leveling foot hygienic certified with machine sd baseplate - Ø150 + ar

Article number: CP-060702.35.00.401



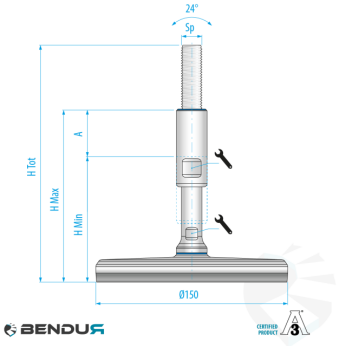

View this product online: https://www.bendur.com/uk/leveling-foot-hygienic-certified-with-machine-sd-baseplate-o150-ar-cp0607023500401.html

Product details

Product series	C500 HEAVY-SPLIT
Footplate diameter [mm]	150

Description

This stainless steel leveling foot with vulcanized anti-slip rubber features a fully machined base with a diameter of 150 mm and an enclosed and separated spindle with hermetic seals M12, M16, M20, M24, M30, or M36. The total height of this leveling foot is 184.5 to 294.5 mm with a maximum load capacity of 12,000, 30,000, 45,000, 70,000, 100,000, or 150,000 N. The best choice for industrial environments with a critical hygiene level, such as in the dairy, food, chemical, and pharmaceutical sectors. The stainless steel base and its special shape guarantee high load resistance and excellent cleanability, especially in critical conditions. The protected spindle offers 100% thread protection and prevents exposure to external agents.

Bendur B.V.

Vaarselstraat 10a | 5711RE Someren | The Netherlands

Tel. +31 (0)40 340 01 86 | www.bendur.com

This document was automatically generated on 01-11-2026. Subject to change.