PRODUCT DATASHEET

Leveling foot with plastic baseplate & fully threaded spindle - Ø60

Article number: CP-060702.40.00.201



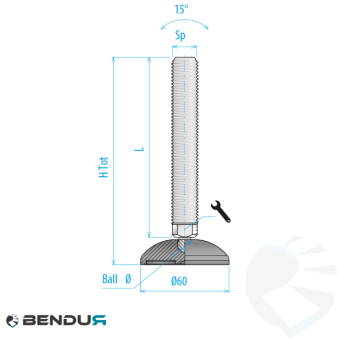

View this product online: https://www.bendur.com/uk/leveling-foot-with-plastic-baseplate-fully-threaded-spindle-o60-cp0607024000201.html

Product details

Product series	BASIC SERIES
Footplate diameter [mm]	60

Description

This leveling foot with a Ø60mm plastic base features a spindle made of stainless steel or galvanized steel M12, M16, or M20. The total height of this leveling foot is 80 to 205mm with a maximum load capacity of 12,000, 15,000, or 16,000N. The standard choice for industrial environments.

Bendur B.V.

Vaarselstraat 10a | 5711RE Someren | The Netherlands

Tel. +31 (0)40 340 01 86 | www.bendur.com

This document was automatically generated on 24-11-2026. Subject to change.