PRODUCT DATASHEET

Leveling foot with plastic baseplate & fully threaded spindle - Ø100

Article number: CP-060702.40.00.401



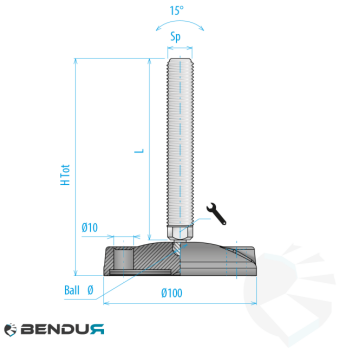

View this product online: https://www.bendur.com/uk/leveling-foot-with-plastic-baseplate-fully-threaded-spindle-o100-cp0607024000401.html

Product details

Product series	BASIC SERIES
Footplate diameter [mm]	100

Description

This leveling foot with a Ø100mm plastic base and floor mounting features an M16 or M20 spindle made of stainless steel or galvanized steel. The total height of this leveling foot is 108 to 208mm with a maximum load capacity of 15,000 or 18,000N. The standard choice for industrial environments.

Bendur B.V.

Vaarselstraat 10a | 5711RE Someren | The Netherlands

Tel. +31 (0)40 340 01 86 | www.bendur.com

This document was automatically generated on 21-11-2026. Subject to change.